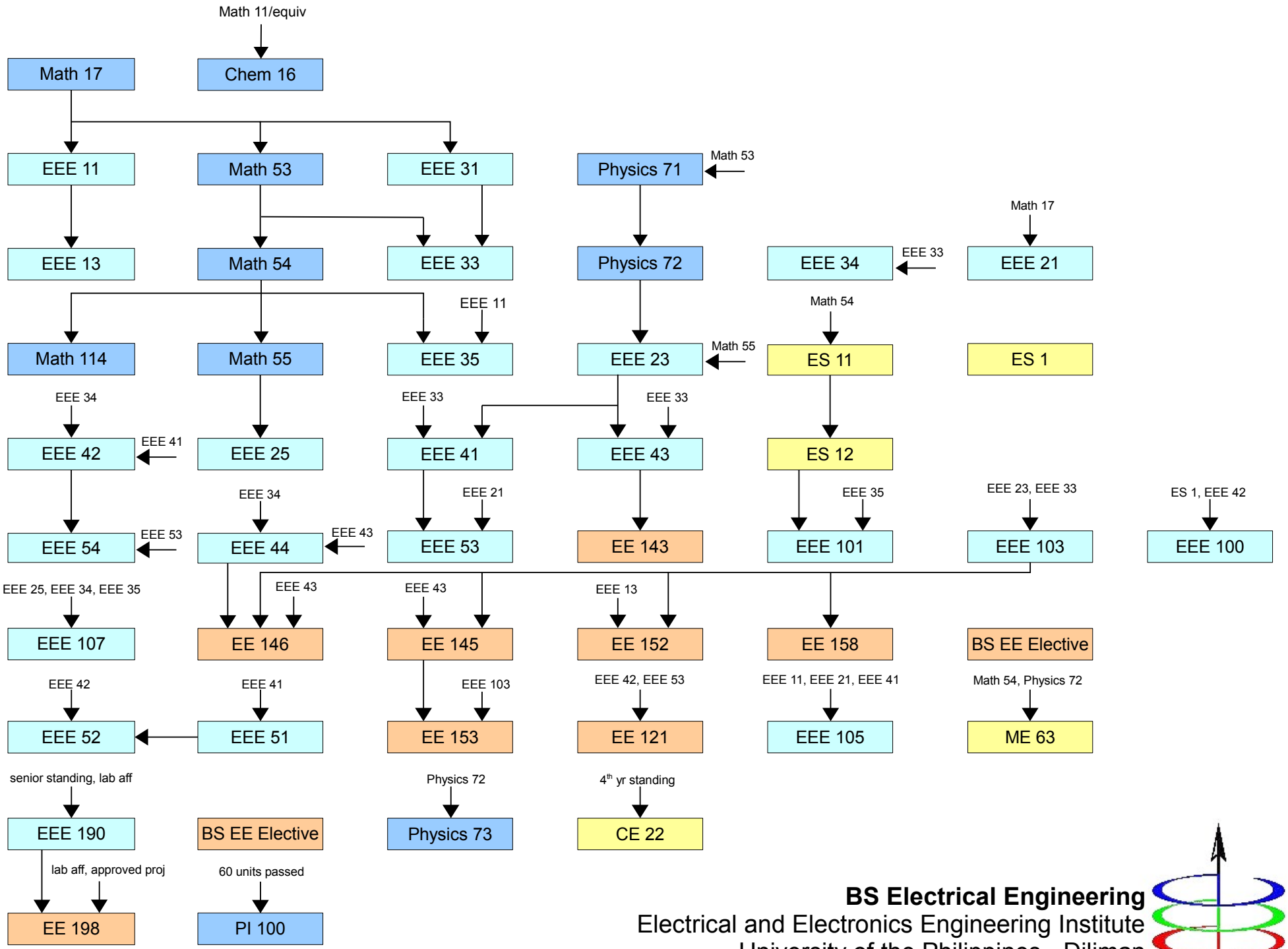

BS Electrical Engineering
Electrical and Electronics Engineering Institute
University of the Philippines - Diliman